OTMT

Before Operating Your Tools,
Please Read These Instructions Carefully

BENEH LATHE

ITEM NO. 87-115-913
MODEL NO. OT222550

Content

SAFETY INSTRUCTIONS FOR LATHE	2
IDENTIFICATION	3
SET-UP Unpacking Clean Up Piece Inventory	3-4
TEST RUN LATHE To test run the lathe	4-5
OPERATIONS Installing tailstock dead center Removing tailstock dead center Adjusting compound side adjusting carriage understanding gear charts reverse threading changing speeds	5-13
MAINTENANCE lubrication checking v-belt	13-14
SERVICE ADJUSTMENTS gibs aligning tailstock bearing preload	13-26

SAFETY INSTRUCTIONS FOR LATHE

1.make sure all guards are in place and that the lathe sits on a flat, stable surface .
2.before starting the lathe be certain the workpiece has been properly engaged in the chuck ,tailstock, center, and that there is adequate clearance for full motion.
3.adjust tool post to provide proper support for the turning tool you will be using. test tool post clearance by rotating workpiece by hand before turning lathe on.
4.select the turning speed which is appropriate for the type of work, material, and tool bit. Allow the lathe to gain its full speed before beginning a cut.
5.never reverse motor direction while the lathe is in motion .
6.do not stop lathe using your hand against the workpiece or chuck.
7.do not leave lathe running unattended for any reason.
8.never leave a chuck key in the lathe chuck.
9.never operate the lathe with damaged or worn parts. maintain your lathe in proper working condition .perform routine inspections and maintenance promptly when called for. put away adjustment tools after use.
10.make sure lathe is turned off, disconnected form its power source and all moving parts have come to a complete stop before starting any inspection, adjustment ,or maintenance procedure.
11.keep loose clothing articles such as sleeves, belts or jewelry items away form the lathe and drill spindles.
12.always use the proper cutting tools for the material you are turning ,make certain they are sharp and that they are help firmly in the tool post.
13.always place a board or piece of plywood across the bedway when removing or installing chucks to avoid the possibility of finger pinch occurring between a loose chuck and the edges of the bedway.

CAUTION

No list of safety guidelines can be complete .every shop environment is different . always consider safety first, as it applies to your individual working conditions. use this and other machinery with caution and respect. failure to do so could result in serious personal injury , damage to equipment or poor work results.

WARNING

Like all power tools, there is danger associated with the lathe .accidents are frequently caused by lack of familiarity or failure to pay attention. use this tool with respect and caution to lessen the possibility of operator injury. If normal safety precautions are overlooked or ignored, serious personal injury may occur.

GROUNDING

in the event of an electrical short, grounding reduces the risk of electric shock by providing a path of least resistance to disperse electric current. the outlet must be properly installed and grounded in accordance with all local codes and ordinances.

IDENTIFICATION

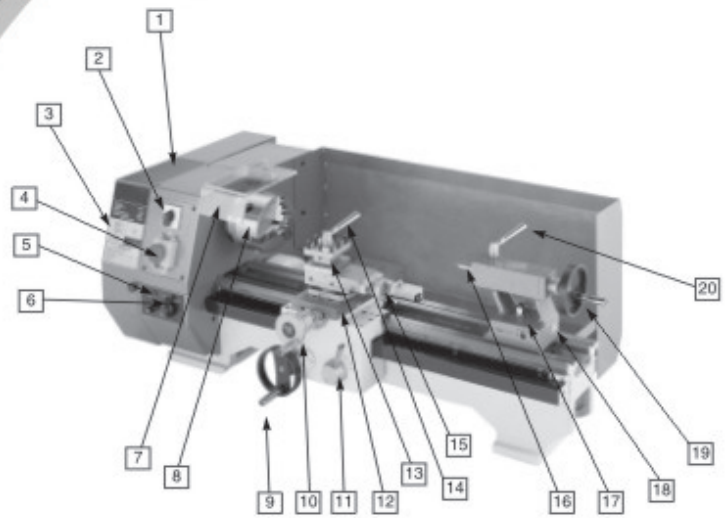

The following is a list of controls and components on the lathe. please take time to become familiar with each term and its location. these terms will be used throughout the manual and knowing them is essential to understanding the instructions and terminology used in this manual.

1. Thread Pitch Gearing & Speed Charts
2. Lathe Forward/Reverse Switch
3. Machine ID/Safety Label
4. Lathe ON/OFF, Emergency Stop Switch
5. Lathe Power Indicator Light
6. Selector Switch
7. Headstock Eyeshield
8. Lathe Chuck
9. Carriage Feed Handwheel
10. Cross Slide Handwheel
11. Automatic Carriage Feed Lever
12. Compound Slide
13. Tool Post
14. Tool Post Lock Handle
15. Compound Slide Handwheel
16. Tailstock Center
17. Tailstock Clamp Bolt
18. Tailstock Axis Alignment Indicator
19. Tailstock Barrel Handwheel
20. Tailstock Center Lock

SET-UP

UNPACKING

this lathe is shipped form the manufacturer in a carefully packed crate. if you discover the machine is damaged after you have signed for delivery, and the truck and driver are gone, you will need to file a freight claim with the carrier. save the containers and all packing materials for possible inspection by the carrier or its agent. Without the packing materials, filing a freight claim can be difficult. if you need assistance determining whether you need to file a freight claim, or with the procedure to file one, please contact you dealer. When you are completely satisfied with the condition of your shipment, you should inventory its parts.

CLEAN UP

The unpainted surfaces are coated with a waxy oil to protect them from corrosion during shipment. remove this protective coating with a solvent cleaner or citrus-based degreaser. to clean thoroughly, some parts may need to be removed. for optimum performance form your machine, make sure you clean all moving parts or sliding contact surfaces that are coated. avoid chlorine-based solvents as they may damage painted surfaces should they come in contact. always follow the manufacturer's instructions when using any type of cleaning product.

PIECE INVENTORY

Inside the crate you will find:

- Bench Lathe
- 3 Outside Jaws
- Lathe Chuck Key
- 30T Gear
- 40T Gear
- 42T Gear
- 50T Gear
- 52T Gear
- 60T Gear
- 66T Gear
- 70T Gear
- 75T Gear
- 80T Gear
- Fuse
- Square Head Wrench
- 3mm Allen Wrench
- 4mm Allen Wrench
- 5mm Allen Wrench
- 6mm Allen Wrench
- 5.5/7mm Combo Wrench
- 8/10mm Combo Wrench
- 12/14mm Combo Wrench
- 17/19mm Combo Wrench
- Dead Center MT#2
- Dead Center MT#3
- Fixed-Shaft Gear 40T
- 45-52 Round Nut Wrench

TEST RUN LATHE

Before continuing to operate, test run the lathe to make sure it runs properly

TO TEST RUN THE LATHE

1. make sure that there is not a chuck key inserted in the chuck ,and that the lathe eye shield is in the down position over the lathe chuck .make this step a habit that you perform every time you start the lathe.
2. Familiarize yourself with the lathe controls shown in figure below .make sure the stop button is all the way down before continuing.
3. plug the lathe into the power outlet!
4. move the carriage feed lever up to the disengage mode .it is important that the carriage feed is not moving and is in the neutral position until later.
5. turn the to left selector switch to the" cutting "position .the lathe power indicator light should light up. note if it is does not light up, unplug the machine and check the fuse, your power source, and the connections on machine before attempting to start the lathe. can our service department if you cannot easily resolve the issue.
6. turn the fwd/rev switch clockwise .this should make the lathe shuck turn clockwise when you start the machine.

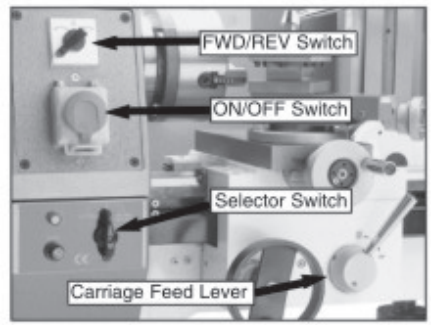

Lathe controls

7. flip up the emergency stop button to reveal the red and green ON/OFF buttons.
8. stand to the side of the lathe chuck line of rotation, and press the green button to turn the lathe on. if the carriage start moving, immediately push the stop button and disengage the carriage feed lever, then restart the lathe.
9. allow the lathe to run for at least two full minutes to make sure it is running satisfactorily.

10.press the lathe emergency stop button to turn the lathe off.

11.after the lathe chuck has come to a complete stop, turn the FWD/REV switch counter-clockwise.

12.stand to the side of the lathe chuck line of rotation, and press the green button to turn the lathe on.

13.allow the lathe to run for at least two full minutes to make sure it is running satisfactorily.

14.press the emergency stop button to turn the lathe off.

15.after the lathe has come to a complete stop ,engage the carriage hand wheel, rotate the handwheel to center the carriage on the bed, then disengage the handwheel.

16.engage the automatic carriage feed lever.

17.stand to the side of the lathe chuck line of rotation,and press the green button to turn the lathe on.

18.verify that the carriage moves along the bed, and press the emergency stop button to turn the lathe off.

Operations

to get the most out of your machine, please take the time to familiarize yourself with the various controls as shown in figures below.

to get the most out of your machine, please take the time to familiarize yourself with the various controls as shown in figures below.

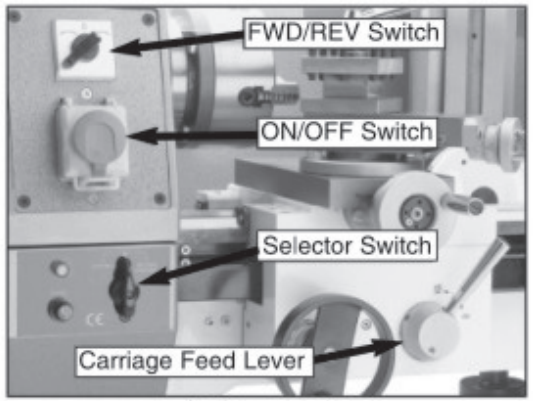

Lathe controls

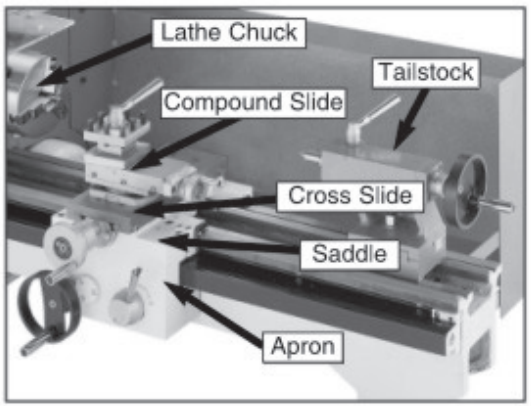

Lathe components

INSTALLING TAILSTOCK DEAD CENTER

There are 2 dead centers included with the lathe . The smaller dead center is a MT#2 (morse taper) and fits in the tailstock barrel.

- **To install the tailstock dead center**

1.familiarize yourself with the tailstock components shown below.

2.make sure that the MT#2dead center and tailstock barrel are clean and free of any dirt, dust, grease, or oil. these parts will last longer and remain accurate when properly cleaned before each assembly. morse tapers will not interlock when dirt or oil are present on the mounting surfaces.

3.insert the end of the dead center into the tailstock barrel, as shown below, unitl it seats tight enough that it will not rotate when turned by hand. Note-do not worry about pushing the dead center into the barrel too far. The force of the center contacting a mounted workpiece will fully seat the taper when the handwheel is tightened.

4.tighten the barrel lock to prevent the tail stock barrel form moving during operation.

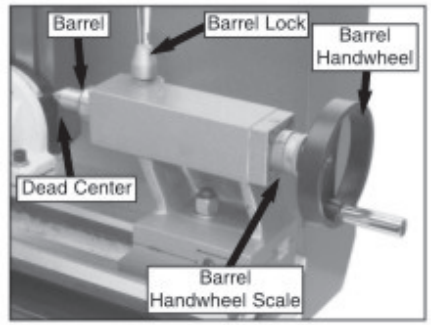

Tailstock components

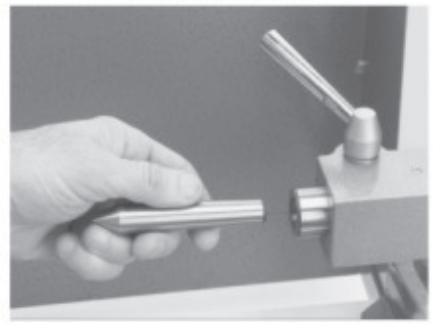

Inserting dead center into tailstock barrel

REMOVING TAILSTOCK DEAD CENTER

- **To remove the tailstock dead center:**

1.use the barrel handwheel to move the tailstock barrel all the way back into the tailstock until the handwheel will no longer turn.

2.pull the dead center out of the tailstock barrel.

- **Adjusting tailstock longitude position**

The tailstock on the lathe clamps to the bed with the nut shown below. this nut allows the tailstock to be positioned longitudinally along the bed and then locked in place.

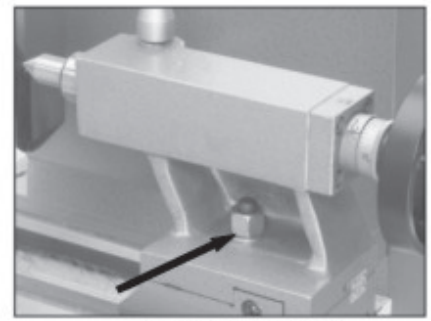

Tailstock clamp bolt

- **To adjust the tailstock longitude position:**

1.Use a 17mm wrench to loosen the tailstock clamp bolt.

2. with your hands, move the tailstock into position along the bed.

3.tighten the tailstock clamp bolt to secure the tailstock into position.

ADJUSTING CROSS SIDE

The cross side is only designed to move perpendicular to the longitudinal axis of the lathe, and it features a scale on the handwheel that displays graduations of one thousandths of 25mm(0.025mm).

- **To adjust the cross side**

1.Using the handwheel, back the cross side away from your starting point by at least 0.4mm, then move the cross side forward to your starting point. Note-this procedure will clear any free movement (or backlash)in the lead screw so your handwheel scale reading will be accurate.

2.Hold the handwheel still and turn the scale so the "0"mark lines up with the "000" mark on the cross side ,as shown in figure below. As long as you avoid backlash by continuing to move the cross side in the same direction, the scale on the handwheel will be accurate.

3.after moving the cross side backward after your operation, remember to clear the back lash before moving the cross side forward to the "0" mark for the next cut.

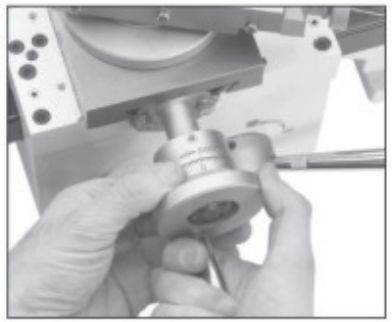

Adjusting handwheel scale

ADJUSTING COMPOUND SIDE

Similar to the cross side , the compound side features a scale that displays graduations of one thousandths of 25mm (0.025mm). unlike the cross side, the compound side can be rotated to a set angle and then it can be moved back and forth along the axis of that angle.

- **To adjust the compound side:**

1.loosen the compound side bolts shown below to be rotated.

2.rotate the compound side to the angle needed for your procedure.

3.tighten the compound side bolts, and check the angle to mark sure it did not move during tightening.

4.use the compound side handwheel to move the tool back and forth along the axis of the new angle. Similar to adjusting the cross side handwheel, mark sure the threads are engaging and all backlash has been cleared before you set the handwheel scale to "0", or it will not be accurate.

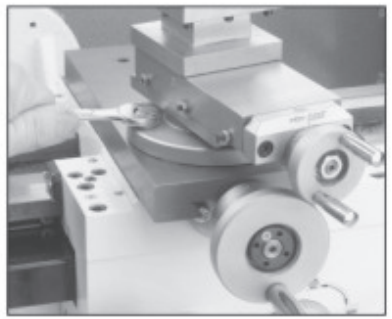

Compound side bolts

ADJUSTING CARRIAGE

Like most lathe , the longitudinal movement of the carriage (carriage feed) on the lathe can be controlled both manually and automatically. Before proceeding, take a closer look at the carriage controls shown below.

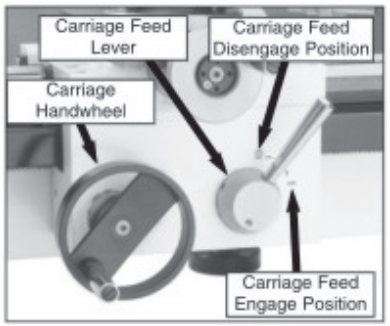

Carriage controls

- **To move the carriage feed manually:**

1.push the carriage feed handwheel toward the carriage to engage the gear on the lead screw.

2.rotate the handwheel clockwise to move the carriage right and rotate the handwheel counterclockwise to move the carriage left.

3.set the handwheel scale in the same manner as described in the "adjusting cross side " instructions, and be sure to account for the backlash.

- **To use automatic carriage feed:**

1.select the desired feed rate you need by looking at the charts on the lathe drive cover. When new, the lathe is geared for a carriage feed rate of 0.1mm per revolution.
Use the manual feed handwheel to position the carriage to your desired starting point and set the scale on the handwheel to "0'.

2.move the carriage feed lever down to engage the half-nut, which in turn, makes the auto-matic carriage feed active.

3.pull out the carriage manual feed handwheel to unlock it so it does not rotate when the automatic carriage feed is engaged.
The carriage feed will now move forward or back-ward, depending on which direction you have selected for lathe rotation.

UNDERSTANDING GEAR CHARTS

The lathe can be geared for a variety of different feed rates, so charts are placed on the drive cover of the lathe that explain how to set up the gear combinations for each type of carriage feed application. These applications are broken into two categories of charts-turning and threading.

Turning chart-the speeds given on the turning chart represent standard speeds for most types of turning applications. See below.

mm		0.1	0.2
V	D	33 80	50 80
F	E	90 25	90 33
G	L	G 90	G 90

Turning chart

Threading charts-by arranging the gears as shown on the charts, you can set up the carriage feed to cut any of the thread pitches displayed. See below.

mm		0.4	0.5	0.6	0.7	0.8	1
G	D	G 80	G 80	G 80	G 80	G 52	G 66
F	E	30 80	30 60	30 50	42 60	60 80	60
L	G	75 G	80 G	80 G	80 G	75 G	G 80

mm		1.25	1.5	1.75	2	2.5	3
G	D	G 52	G 66	G 80	G 70	G 80	G 80
F	E	75 80	75 80	70 80	80	75 80	75 25
L	G	60 G	50 G	40 G	G 40	30 G	80 G

1"/n		10	11	14	19
G	D	G 80	G 80	G 80	G 80
F	E	66 40	60 40	75 50	50 40
L	G	52 G	52 G	66 G	75 G

1"/n		20	22	40	44
G	D	G 60	G 80	G 80	G 80
F	E	66 80	60 80	33 52	30 52
L	G	52 G	52 G	80 G	80 G

Threading charts

- **This is how to read the feed rate charts:**

1.The box in the upper left-hand corner of each chart tells whether that chart represents carriage feed movement for standard or imperial threads. these boxes are shaded below.

mm	1.25	1.5	1.75
G D	G 52	G 66	G 80
F E	75 80	75 80	70 80
L⇌G	60 G	50 G	40 G

1"/n	10	11
G D	G 80	G 80
F E	66 40	60 40

The shaded box indicates whether the chart is for standard or imperial threads

2.the boxes in the top row of each chart (excluding the box in the left-hand corner) shows the thread pitches listed on that chart. These boxes are shaded below.

mm	0.4	0.5	0.6	0.7	0.8	1
G D	G 80	G 80	G 80	G 80	G 52	G 66
F E	30 80	30 60	30 50	42 60	60 80	60
L⇌G	75 G	80 G	80 G	80 G	75 G	G 80

The shaded boxes show the thread pitches listed on this chart

3.the boxes on the left-hand column (excluding the box in the upper left-hand corner) represent the gear positions on each shaft. these boxes are shaded below and the shafts are called out with arrows.

	mm	0.4
Upper Adjustable Shaft →	G D	G 80
Lower Adjustable Shaft →	F E	30 80
Pivot Shaft →	L⇌G	75 G

The shaded boxes show the thread pitches listed on this chart

4.each shaft has room for two positions to mount the gears-a forward position and a rear position. Figure below separates these positions into different shades for you to under stand better.

mm	1.25	1.5	1.75
G D	G 52	G 66	G 80
F E	75 80	75 80	70 80
L⇌G	60 G	50 G	40 G

Rear
Forward

The shaded boxes show the thread pitches listed on this chart

Both forward and rear positions must be filled on the shaft in order for the gears to work properly. A good example of this is the blank spot "g", as shown in the chart above .although the chart shows this as a blank spot, there should actually be a spacer is only reflects active gear positions.

NOTICE

On some setups, smaller gears must be used as spacers on the adjustable shafts.

5.the lines between gears "D "&"E" and gears "F "&"L" on the chart below indicate where the gears should be in mesh.The shaded boxes highlight the gear mesh lines

mm	0.4	0.5	0.6
G D	G 80	G 80	G 80
F E	30 80	30 60	30 50
L⇌G	75 G	80 G	80 G

Chart showing gear setup for 0.1mm

6.the boxes shaded below represent the actual gear combinations required to cut the thread pitches.

mm	1.25	1.5	1.75	2	2.5	3
G D	G 52	G 66	G 80	G 70	G 80	G 80
F E	75 80	75 80	70 80	80	75 80	75 25
L⇌G	60 G	50 G	40 G	G 40	30 G	80 G

The shaded boxes show specific gear setups

Here is a realworld example of a gear setup as shown on the chart: When the lathe is shipped from the factory, it is geared for a carriage feed rate of 0.1mm per spindle revolution, or the gear combination shaded below.

mm		0.1	0.2
V	D	33 80	50 80
F	E	90 25	90 33
G	L	G 90	G 90

Chart showing gear setup for 0.1mm

Figure below shows a profile of the 0.1mm feed rate actual gear setup on the machine. Notice how the gears mesh together in the locations displayed on the chart.

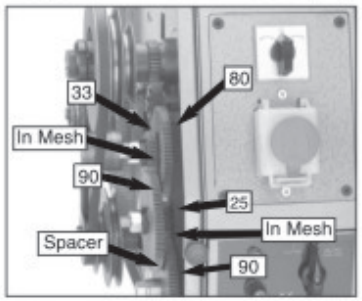

Actual gear setup for 0.1mm feed rate

REVERSE THREADING

The lathe can be setup to turn left-handed threads by adding another fixed-shaft gear and moving the original fixed-shaft gear to another mounting location.

Figure below shows the three mounting locations for fixed-shaft gears (spindle drive pulley is removed for clarity). For illustration purposes, we label these mounting positions A,B&C

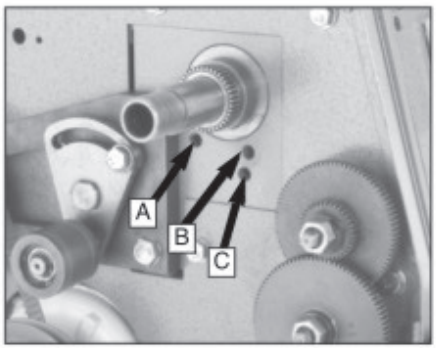

Fixed-shaft gear mounting positions

- **To set up the gears for reverse threading:**

1.Disconnect the lathe from the power source!

2.locate the extra fixed-shaft gear (shown in figure below)in your inventory of loose parts.

3.thread the extra fixed-shaft gear into mounting location "A" as shown below.

2.Extra Fixed-shaft Gear

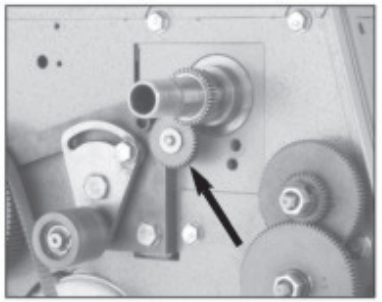

3.Extra Fixed-shaft Gear Mounted In Position "A"

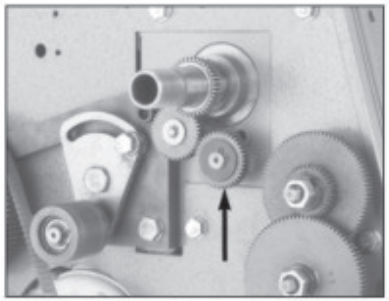

4.Fixed-shaft Gear Mounted In Position "B"

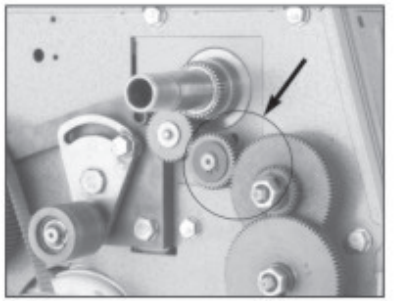

5.All Gears In Mesh For Reverse Threading Operations

4.when the machine is shipped, a fixed-shaft gear is in position "C". remove that fixed-shaft gear form mounting location "C" and thread it into mounting location "B" as shown below .

5.loosen the cap screw on the gear bracket, and pivot the bracket so the top gear meshes with the fixed-shaft gear tat is in position "B", as shown below.

6.tighten the cap screw in the gear bracket to keep it from pivoting.

7.spin the lathe chuck by hand to ensure that the gears do not bind.

8.replace the cover and test run the machine before proceeding with your specific operation.

CHANGING SPEEDS

The lathe features 6 speeds-125,210,420,620, 1000&2000rpm. (may have some small changes due to the power frequency.) these speeds can be changed by positioning the v-belt in different sheaves on the drive pulleys, as illustrated in the speed change chart on the machine label or in below.

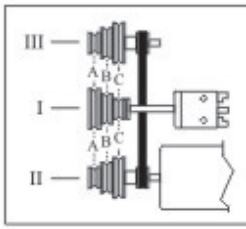

n/min	A	B	C
II - I	620	1000	2000
III - I	125	210	420

Speed change chart

• To change the belt position on the pulleys:

1.disconnect the lathe from the power source!

2.open the drive belt cover.

3.loosen the bolt on the tensioner bracket (shown in figure below) with a 19mm wrench.

4.move the pulley bracket away from the belt.

5.position the belt into the pulley sheaves that dictate the speed required for your operation.

6.move the pulley bracket into the belt and tension it until there is about 12mmm deflection on the side of the belt that is opposite of where the tensioner is making contact.

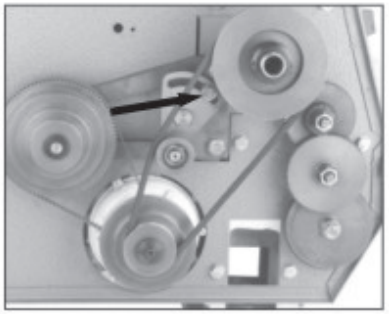

Tensioner Adjustment Bolt

Figure below shows how to check for proper tension by using a ruler and your thumb. Note-only moderate pressure is needed to check belt tension!

7.replace the drive belt cover.

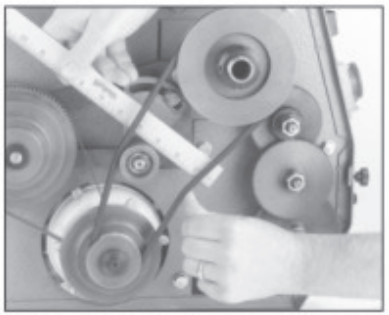

Checking For Proper V-belt Tension

Caution

Some threading operations may damage the lead screw if performed at high speeds. Always use the slowest speed possible for your particular operation!

Maintenance

LUBRICATION

For lubrication your machine, we recommend tat you use a manual oiler (oil can) filled with ISO68 or SAE20W nondetergent oil or similar lubricant.

Ball fittings- shown in figure below, ball fittings are responsible for the majority of the machine lubrication. to lubricate ball fittings, depress the ball with the tip of the oil can nozzle and squirt a little oil inside the fitting. Make sure to clean the outside of the ball fitting before and after each use to keep out contaminants.

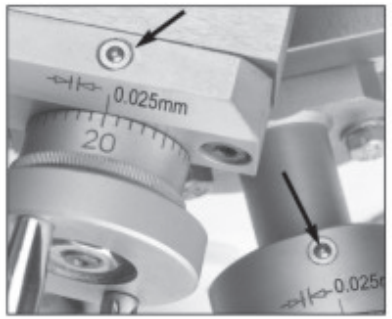

Lubrication Ball Fittings

Ball fitting lubrication points-lubricate the following areas every 8 hours of actual use:

1.left leadscrew support
2.compound side
3.compound side leadscrew
4.tailstock barrel
5.tailstock leadscrew
6.right leadscrew support
7.fixed-shaft gear
8.synchronized counter pulley
9.upper adjustable shaft
10.lower adjustable shaft
11.pivot shaf
12.bed guide
13.cross side leadscrew
14.bed guide
15.bed guide
16.apron
17.cross side leadscrew support
18.apron
19.bed guide
20.bed guide
21.bed guide

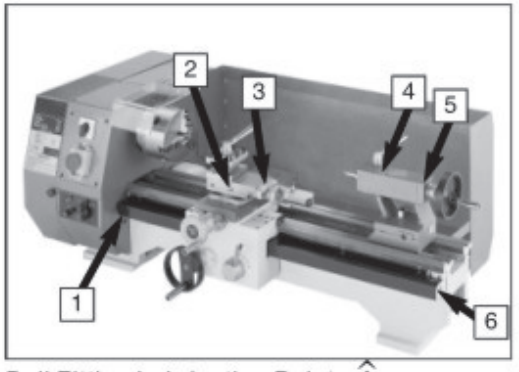

Ball Fitting Lubrication Points

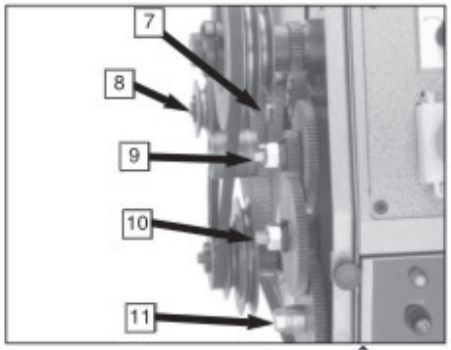

Ball Fitting Lubrication Points

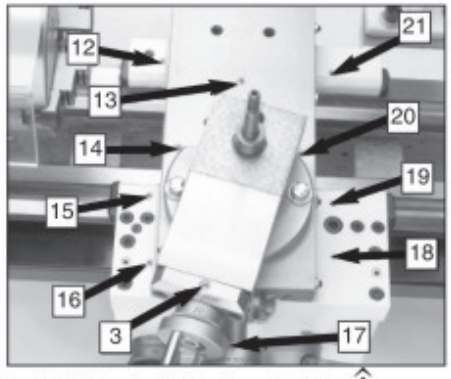

Ball Fitting Lubrication Points

Gears

-Apply a minimal amount of oil to the teeth of the end gears after assembly and each 8 hours of actual use.avoid getting oil on the belt or pulleys when lubricating. Also, regularly apply lubrication to all the ball fittings drive box.

Long leadscrew

-Apply a minimal amount directly on the rack every 8 hours of actual use.

Carriage Rack

-Apply a minimal amount directly on the rack every 8 hours of actual use.

CHECKING V-BELT

To ensure optimum power transmission from the motor, the v-belts must be in good condition and must operate under proper tension. The belts should be checked for cracks, fraying, and wear at least every 3 months- more often if the machine is used daily.

The check the v-belt:

1.Unplug the lathe from its power source!

2.Open the drive cover.

3.Note the condition of the v-belt. If the v-belt is cracked, frayed, or glazed, it should be replaced.

SERVICE ADJUSTMENTS

Gibs

There are three gib adjustments for the lathe the cross side gib, the compound side gib and the apron gib.

Notice

When adjusting gibs, keep in mind that the goal of gib adjustment is to remove unnecessary sloppiness without causing the sides to bind. Loose gibs may caus poor finishes on the workpiece and may cause premature wear on the slide, leadscrew and nut.

Cross-side Gib-the gib on the cross-side is adjusted by tightening or loosening the 4 gib screws located on the right-hand side of the slide. See figure below. Before adjusting the gib screws, loosen their jam nuts. The gib is held in place by the setscrews. Do not over tighten. The gib is properly adjusted when a slight drag is detected while turning the hand crank. This drag should be every distributed among the 4 setscrews, so adjust each screw until a slight drag is detected while the hand crank is turned.

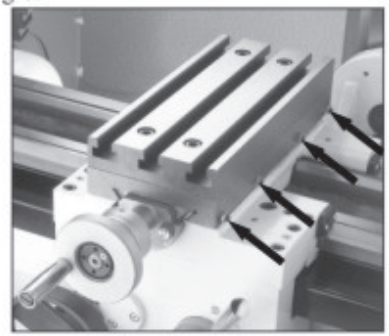

Cross Slide Gib Screws

Compound Gib-the gib on the compound has 3 screws that maintain tension on the slide. These screws are held in place with retaining nuts . to adjust, loosen the retaining nuts and then tighten the screws as needed. When proper tension has been detected by turning the hand crank on the compound, tighten the retaining nuts while maintaining the position of the screw with an allen wrench as in figure below.

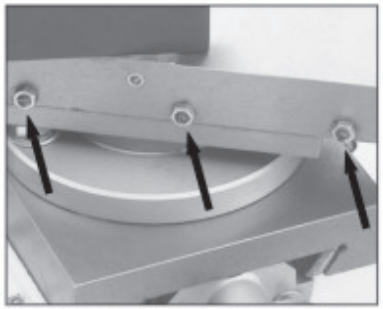

Compound Slide Gib Screws

Saddle Gibs-there are 4 tensioning screws for both the front and rear saddle gibs. Before making adjustments to the saddle gib, ensure that the front lock lever is loose by turning it counter –clockwise . see figures below. It is important the screws are tightened evenly .a slight drag should be detected while turning the hand crank at the end of the lathe.

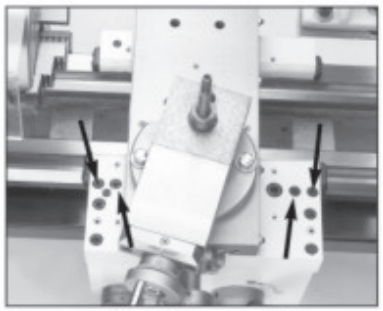

Front saddle gib screws

Rear saddle gib screws

ALIGNING TAILSTOCK

1.Center drill a 150mm long piece of round cold rolled stock on both ends. Set it aside for use in step4.
2.Make a dead center by turning a shoulder to make a shank, then flip the piece over in the chuck and turn a 60°point. See figure below. Note –as long as it remains in the chuck, the point of your center will be accurate to your spindle axis. Keep in mind that the point will have to be refinished whenever it is removed and returned to the chuck.

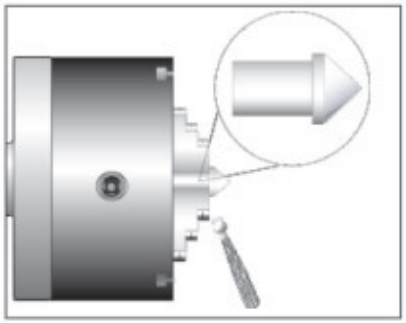

Finished dead center

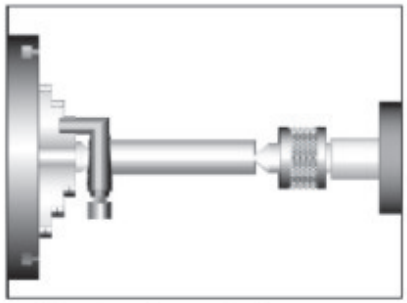

Bar stock mounted on center

3.Place a center in your tailstock.
4.Attach a lathe dog to the bar stock and mount it between the centers. See figure below.
5.Turn approximately 0.25mm off of the diameter.

Notice

Before making adjustments to the tailstock, mount a dial indictor so that the dial plunger is on the tailstock barrel. See figure below.

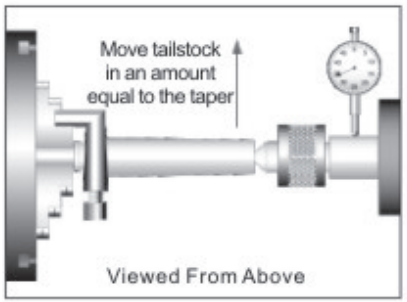

Adjusting for headstock end taper

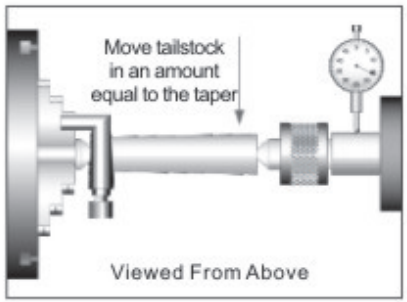

Adjusting for headstock end taper

6.Measure the workpiece with a micrometer. If the stock is fat at the tailstock end, the tailstock needs to be moved toward you the amount of the taper. See figure above. If the stock is thinner at the tailstock end, the tailstock needs to be moved away from the operator by at least the amount of the taper. See figure below.
7.Loosen the tailstock clamp nut and the lock screw shown in figure below.
8.Use the tailstock adjustment screws on both sides to adjust move the tailstock offset by the amount of the taper.
9.Tighten the clamp nut, lock screw and adjustment screws. Be careful not to move the tailstock out of position when tightening the adjustment screws
10.Turn another 0.25mm off of the stock and check for taper.Repeat steps 7-9 as necessary until the desired amount of accuracy is achieved.

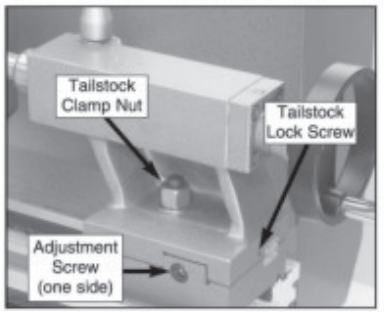

Tailstock offset adjustment screw

BEARING PRELOAD

this lathe is shipped form the factory with the bearing preload already set. If the preload requires resetting for whatever reason, please contact our service department for further instructions.

Wiring Diagram

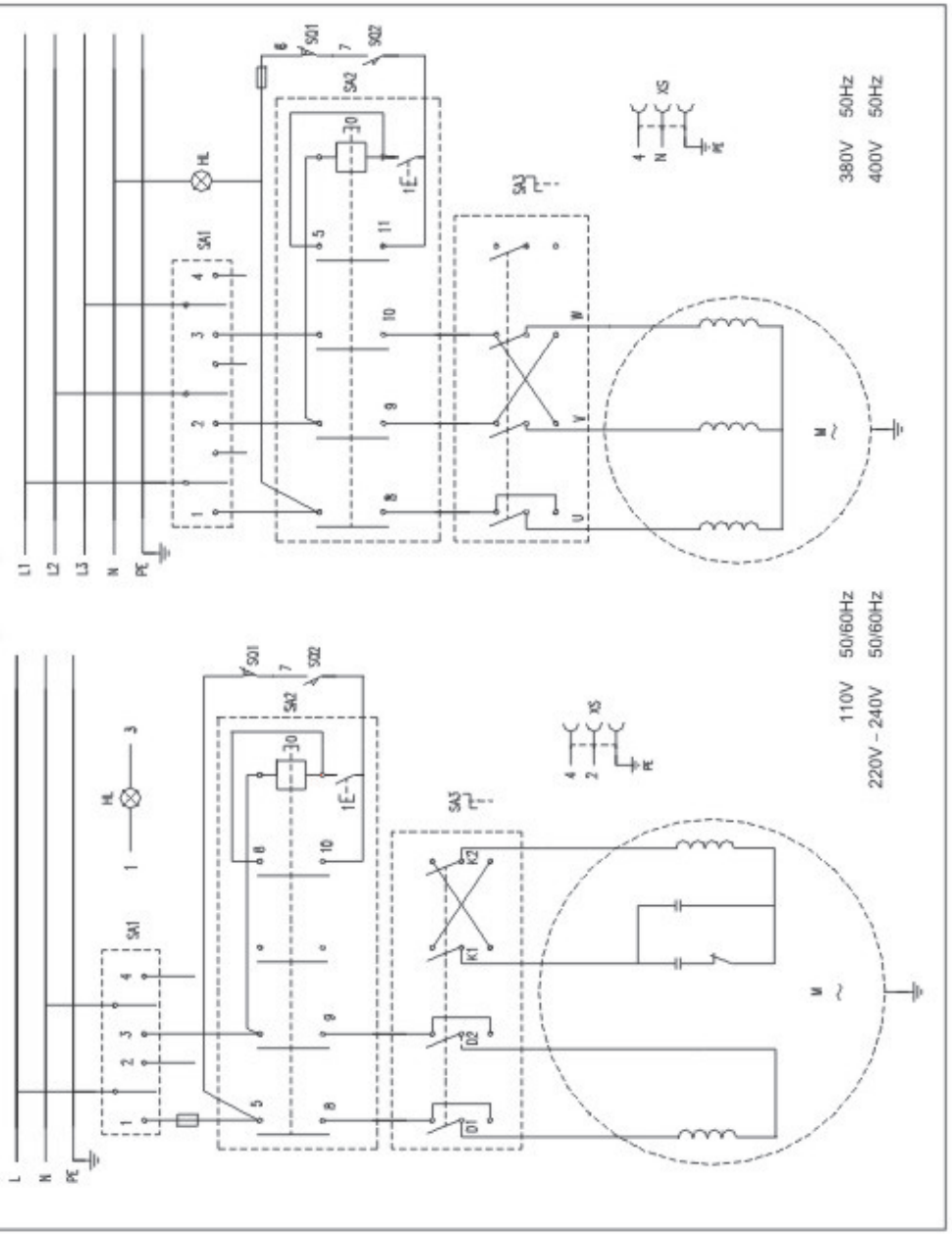

PART NO.	DESCRIPTION
101	PHLP HD SCR M5-.8 X 8
102	LEADSCREW COVER
103	EXT RETAINING RING 14MM
104	CHANGE GEAR SPACER
105	SMALL GEAR
106	KEY 4 X 4 X 8
107	CHANGE GEAR SHAFT
108	PHLP HD SCR M4-.7 X 16
109	ADJUSTING DISC
110	SHAFT SUPPORT
111	TAPER PIN 6 X 26
112	PHLP HD SCR M5-.8 X 20
113	BOLT (WITH SHOULDER)
114	OIL CUP 6
115	BLOCK FOR SWITCH
116	PHLP HD SCR M4-.7 X 8
117	LEADSCREW SUPPORT L
118	PHLP HD SCR M4-.7 X 8
119	ROUND NUT
120	STEEL WASHER
121	PHLP HD SCR M5-.8 X 14
122	SWITCH LABEL
123	SHAFT COVER
124	BED
125	HEX NUT M6-1.0
126	FLAT WASHER 6MM
127	HEX BOLT M6-1 X 10
128	SPLASH GUARD
129	PHLP SCR M8-1.25 X 15
130	FLAT WASHER 8MM
131	PHLP SCR M8-1.25 X 20
132	RACK
133	PHLP HD SCR M5-.8 X 12
134	LEADSCREW SUPPORT R
135	LONG LEADSCREW
136	ROLL PIN 4 X 25
137	SLEEVE JOINT
138	JOINT SHAFT
146	HEX BOLT M12-1.75 X 40
147	FLAT WASHER 12MM
148	KEY 4 X 4 X 16
154	PHLP HD SCR M4-.7 X 16

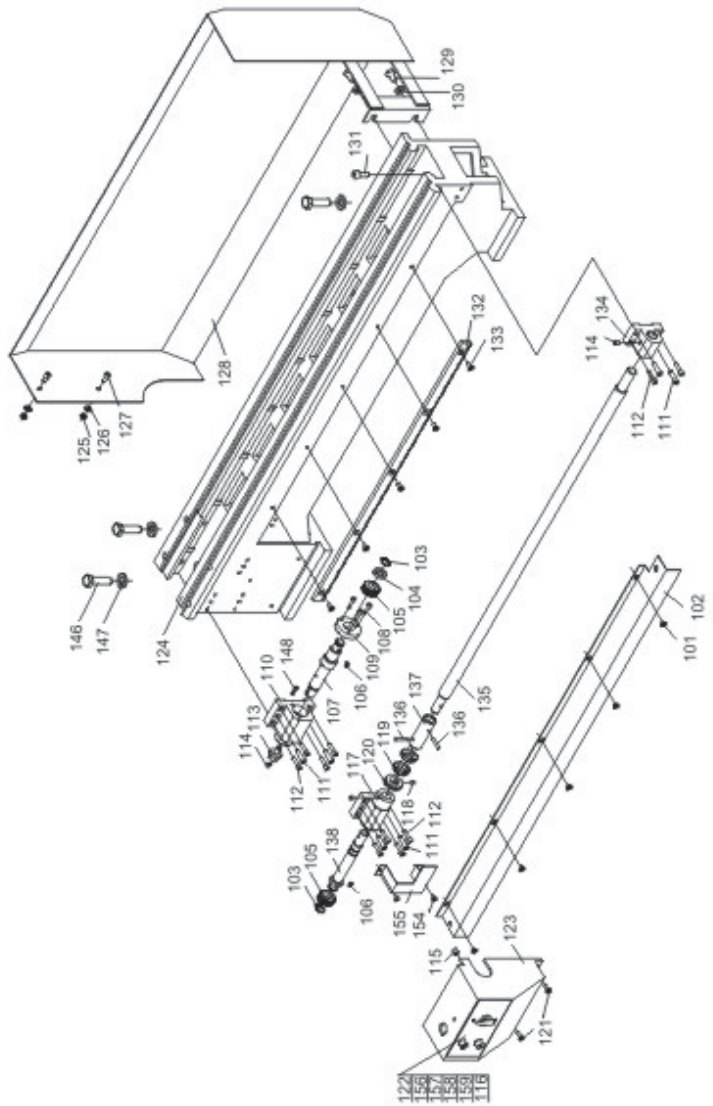

PART NO.	DESCRIPTION
155	SMALL GEAR PROTECT
156	GREEN LAMP
157	FUSE BOX
158	FUSE
159	SELECTOR SWITCH

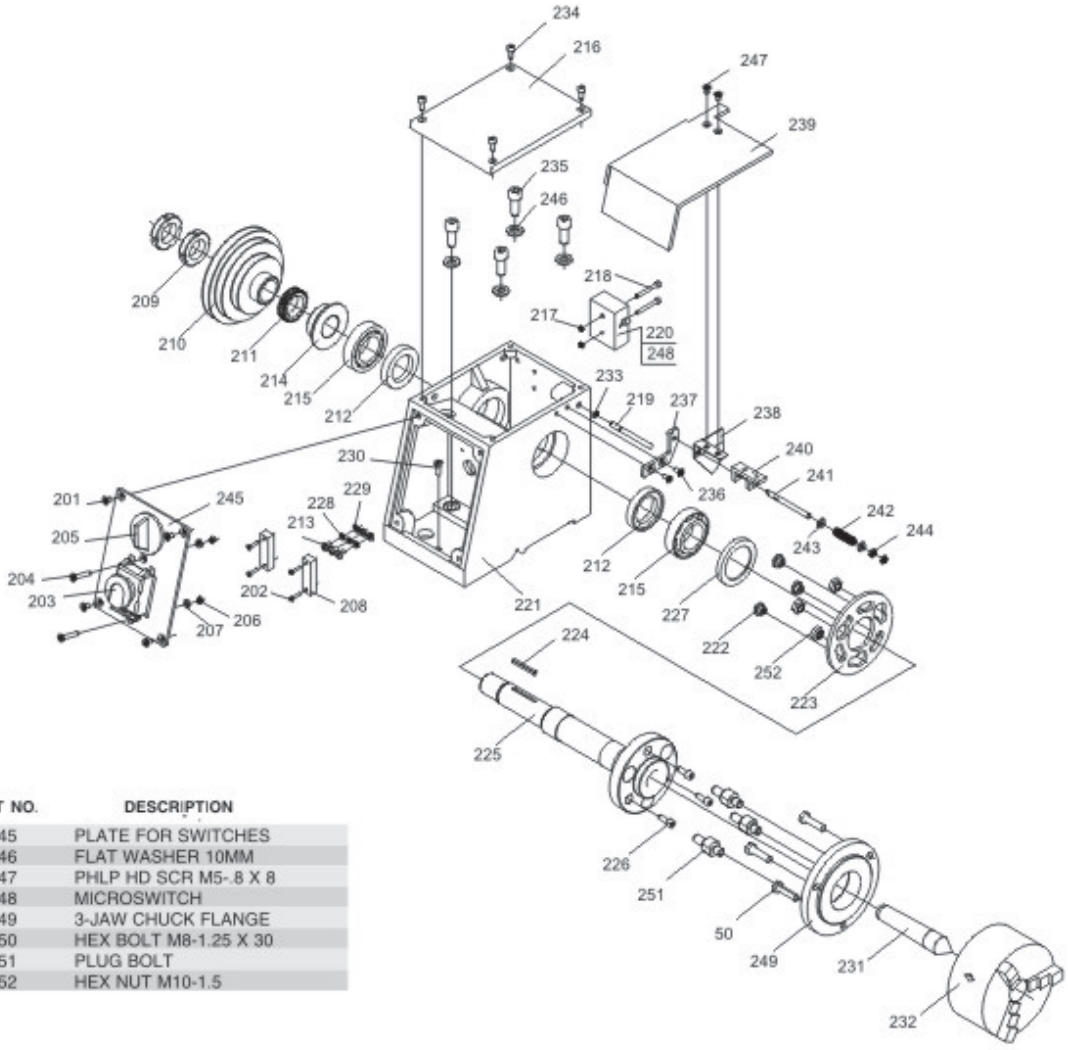

PART NO.	DESCRIPTION
245	PLATE FOR SWITCHES
246	FLAT WASHER 10MM
247	PHLP HD SCR M5-.8 X 8
248	MICROSWITCH
249	3-JAW CHUCK FLANGE
250	HEX BOLT M8-1.25 X 30
251	PLUG BOLT
252	HEX NUT M10-1.5

PART NO.	DESCRIPTION
201	PHLP HD SCR M5-.8 X 10
202	PHLP HD SCR M3-.5 X 14
203	POWER SWITCH W/STOP
204	PHLP HD SCR M5-.8 X 30
205	FWD/REV SWITCH
206	HEX NUT M5-0.8
207	FLAT WASHER 5MM
208	CONNECTOR
209	ROUND NUT M27-1.5
210	SPINDLE PULLEY
211	SPINDLE GEAR
212	OIL RING
213	PHLP HD SCR M5-.8 X 8
214	SPINDLE SPACER
215	BEARING 32007
216	SPINDLE BOX COVER
217	HEX NUT M4-0.7
218	PHLP HD SCR M4-.7 X 35
219	PIN SHAFT
220	BOX FOR MICRO SWITCH
221	HEAD STOCK BODY
222	FIXING NUT
223	ROTATABLE SPACER
224	KEY 4 X 4 X 40
225	SPINDLE
226	PHLP HD SCR M6-1 X 16
227	FRONT BEARING COVER
228	LOCK WASHER 5MM
229	EXT TOOTH WASHER M5
230	PHLP HD SCR M5-0.8 X 16
231	SPINDLE CENTER MT3
232	3-JAW CHUCK D=125MM
233	EXT RETAINING RING 6MM
234	PHLP HD SCR M5-.8 X 12
235	PHLP SCR M10-1.5 X 25
236	PHLP HD SCR M5-.8 X 10
237	SUPPORT
238	LIMIT BLOCK
239	CHUCK GUARD
240	FIXING SUPPORT
241	SMALL SHAFT
242	COMPRESS SPRING
243	FLAT WASHER 6MM
244	HEX NUT M6 1 0

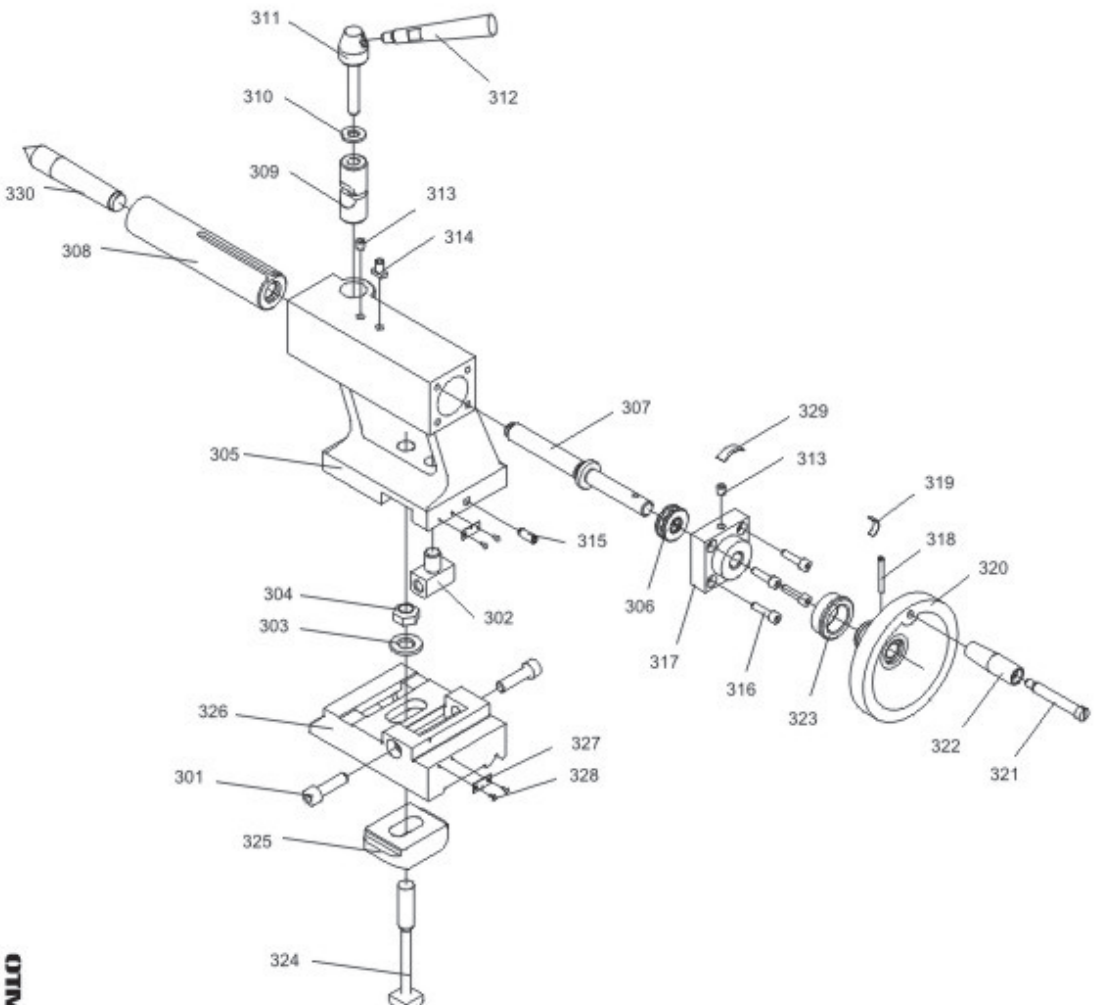

PART NO.	DESCRIPTION
301	PHLP SCR M8-1.25 X 30
302	TAILSTOCK T-NUT
303	FLAT WASHER 12MM
304	HEX NUT M12-1.75
305	TAILSTOCK BODY
306	BEARING 51101
307	TAILSTOCK LEADSCREW
308	TAILSTOCK SLEEVE
309	TUBULAR CLAMP
310	FLAT WASHER 8MM
311	CLAMP BOLT
312	HANDLE
313	OIL CUP
314	T-TAPY FLAT KEY
315	PHLP HD SCR M6-1 X 16
316	PHLP HD SCR M5-.8 X 20
317	TAILSTOCK END COVER
318	CYLINDER PIN 4*30
319	SPRING BOW
320	HAND WHEEL
321	HANDLE BOLT
322	HANDLE SLEEVE
323	INDEX RING
324	SQ HD BOLT M12 X 100
325	TAILSTOCKCLAMP PLATE
326	BASE
327	ZERO POSITION LABEL
328	LABEL RIVET
329	INDICATE LABEL
330	TAILSTOCK CENTER MT2

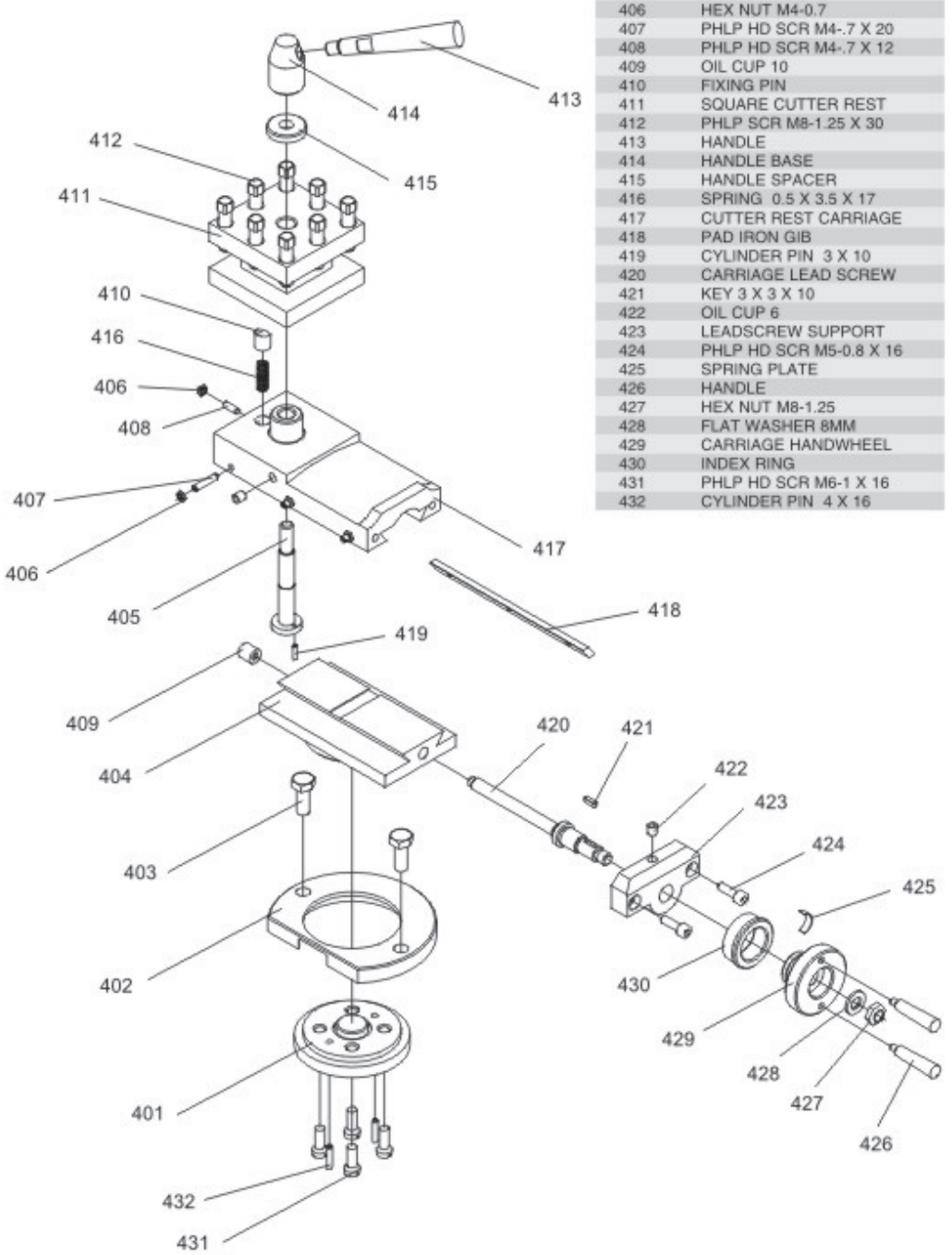

PART NO.	DESCRIPTION
401	CUTTER REST BASE
402	CLAMP DISC
403	HEX BOLT M8-1.25 X 20
404	CUTTER REST DISC
405	CUTTER REST BOLT
406	HEX NUT M4-0.7
407	PHLP HD SCR M4-.7 X 20
408	PHLP HD SCR M4-.7 X 12
409	OIL CUP 10
410	FIXING PIN
411	SQUARE CUTTER REST
412	PHLP SCR M8-1.25 X 30
413	HANDLE
414	HANDLE BASE
415	HANDLE SPACER
416	SPRING 0.5 X 3.5 X 17
417	CUTTER REST CARRIAGE
418	PAD IRON GIB
419	CYLINDER PIN 3 X 10
420	CARRIAGE LEAD SCREW
421	KEY 3 X 3 X 10
422	OIL CUP 6
423	LEADSCREW SUPPORT
424	PHLP HD SCR M5-0.8 X 16
425	SPRING PLATE
426	HANDLE
427	HEX NUT M8-1.25
428	FLAT WASHER 8MM
429	CARRIAGE HANDWHEEL
430	INDEX RING
431	PHLP HD SCR M6-1 X 16
432	CYLINDER PIN 4 X 16

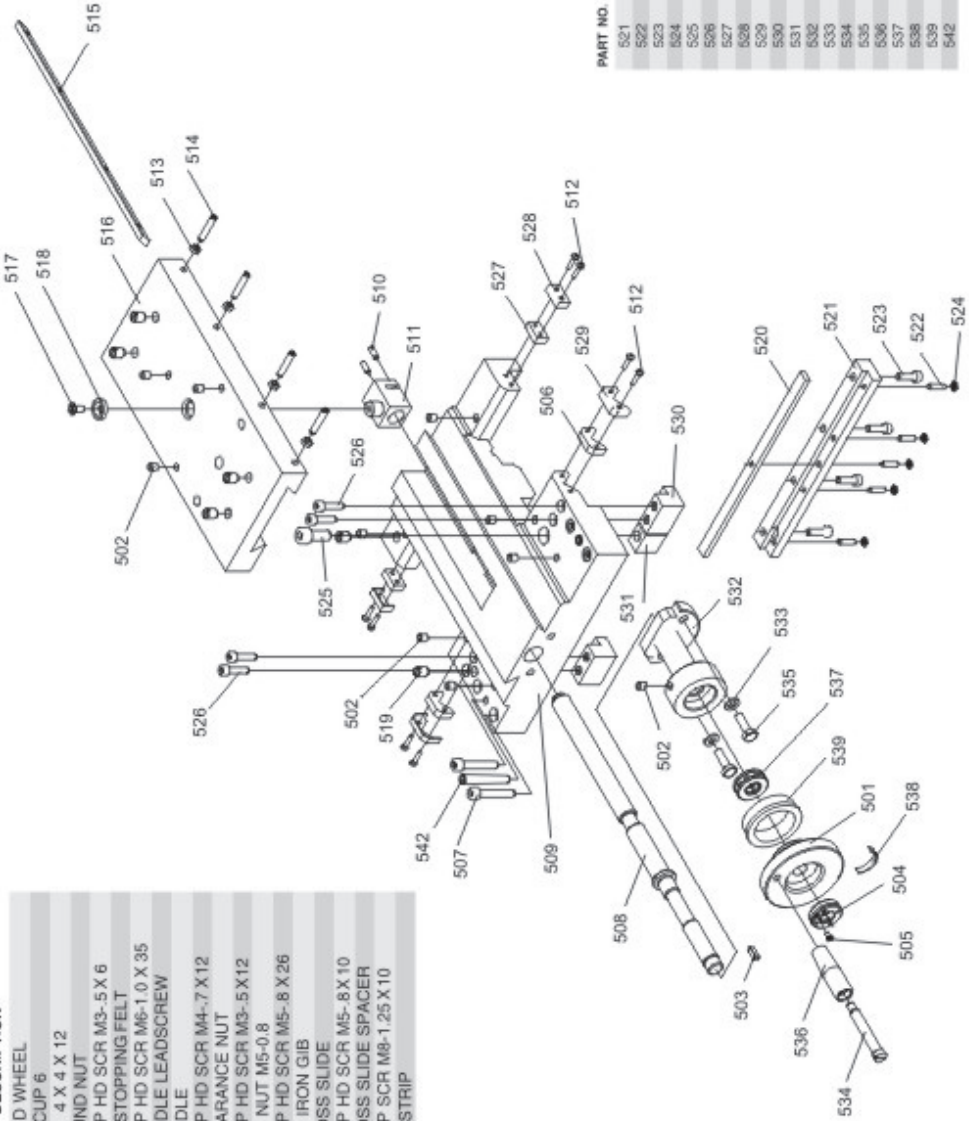

PART NO.	DESCRIPTION
501	HAND WHEEL
502	OIL CUP 6
503	KEY 4 X 4 X 12
504	ROUND NUT
505	PHLP HD SCR M3-.5 X 6
506	OIL-STOPPING FELT
507	PHLP HD SCR M6-1.0 X 35
508	SADDLE LEADSCREW
509	SADDLE
510	PHLP HD SCR M4-.7 X12
511	CLEARANCE NUT
512	PHLP HD SCR M3-.5 X12
513	HEX NUT M5-0.8
514	PHLP HD SCR M5-.8 X 26
515	PAD IRON GIB
516	CROSS SLIDE
517	PHLP HD SCR M5-.8 X 10
518	CROSS SLIDE SPACER
519	PHLP SCR M8-1.25 X 10
520	GIB STRIP

PART NO.	DESCRIPTION
521	REAR-CLAMP PLATE
522	PHLP HD SCR M4-.7 X 16
523	PHLP HD SCR M5-.8 X 16
524	HEX NUT M4-0.7
525	PHLP SCR M6-1.25 X 20
526	PHLP HD SCR M5-.8 X 20
527	OIL-STOPPING FELT
528	PROTECTING PANEL
529	PROTECTING PANEL
530	FRONT-CLAMP PLATE
531	BRAKING PLATE
532	LEADSCREW SUPPORT
533	FLAT WASHER 6MM
534	HANDLE BOLT
535	HEX BOLT M6-1 X 20
536	HANDLE SLEEVE
537	BEARING 8101
538	SPRING PLATE
539	INDEX RING
542	ROLL PIN 6 X 45

PART NO.	DESCRIPTION
618	SHAFT SLEEVE
619	GEAR
620	PHLP HD SCR M4-.7 X 8
621	KEY 5 X 5 X 10
622	GEAR SHAFT
623	PHLP HD SCR M5-.8 X 16
624	ROLL PIN 4 X 22
625	HALF NUT BASE
626	ROLL PIN 5 X 12
627	ROLL PIN 3 X 20
628	HALF NUT
629	SLOTTED DISC
630	ROTATING SHAFT
631	SHAFT SLEEVE
632	MOVING PLATE
633	PHLP HD SCR M4-.7 X 8

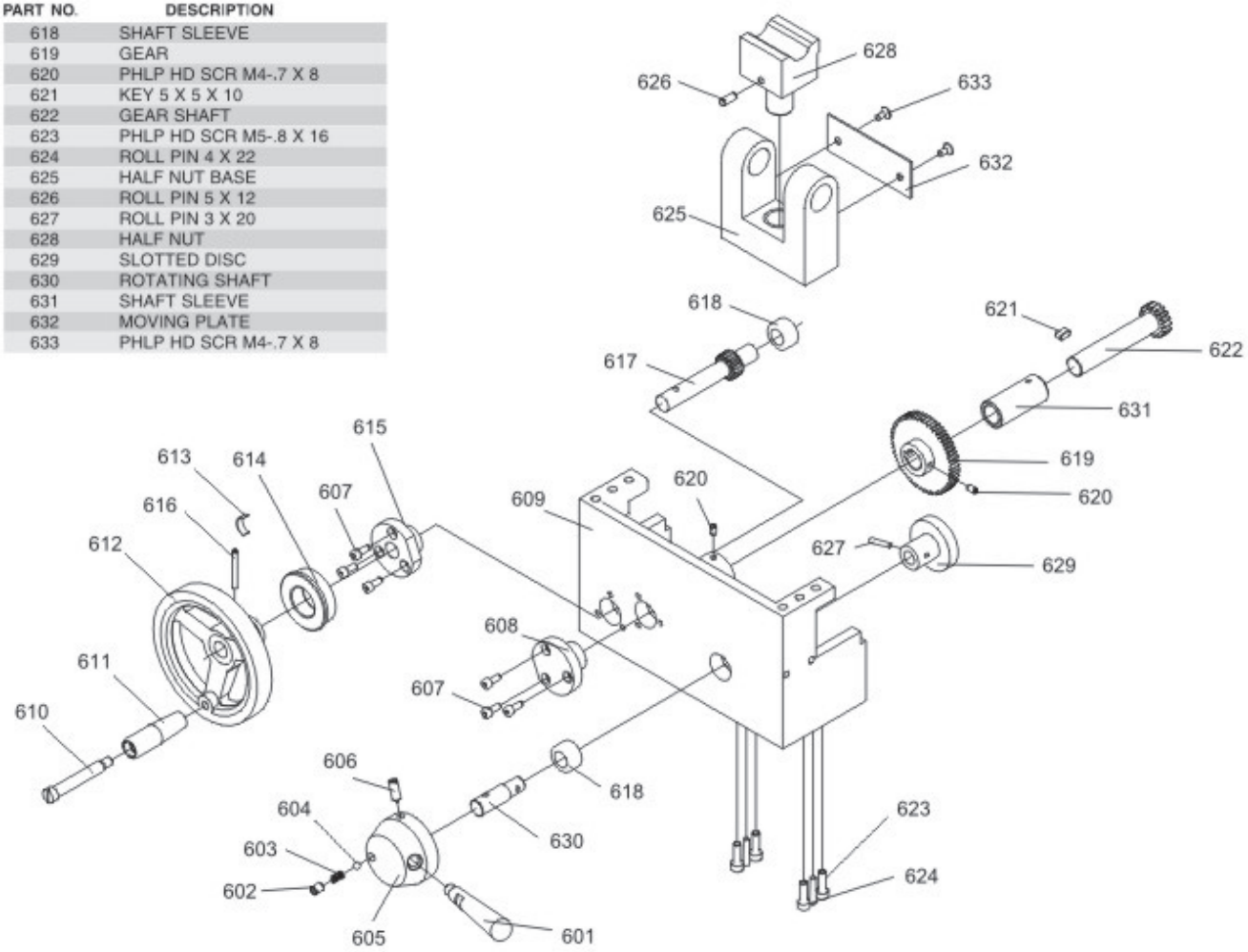

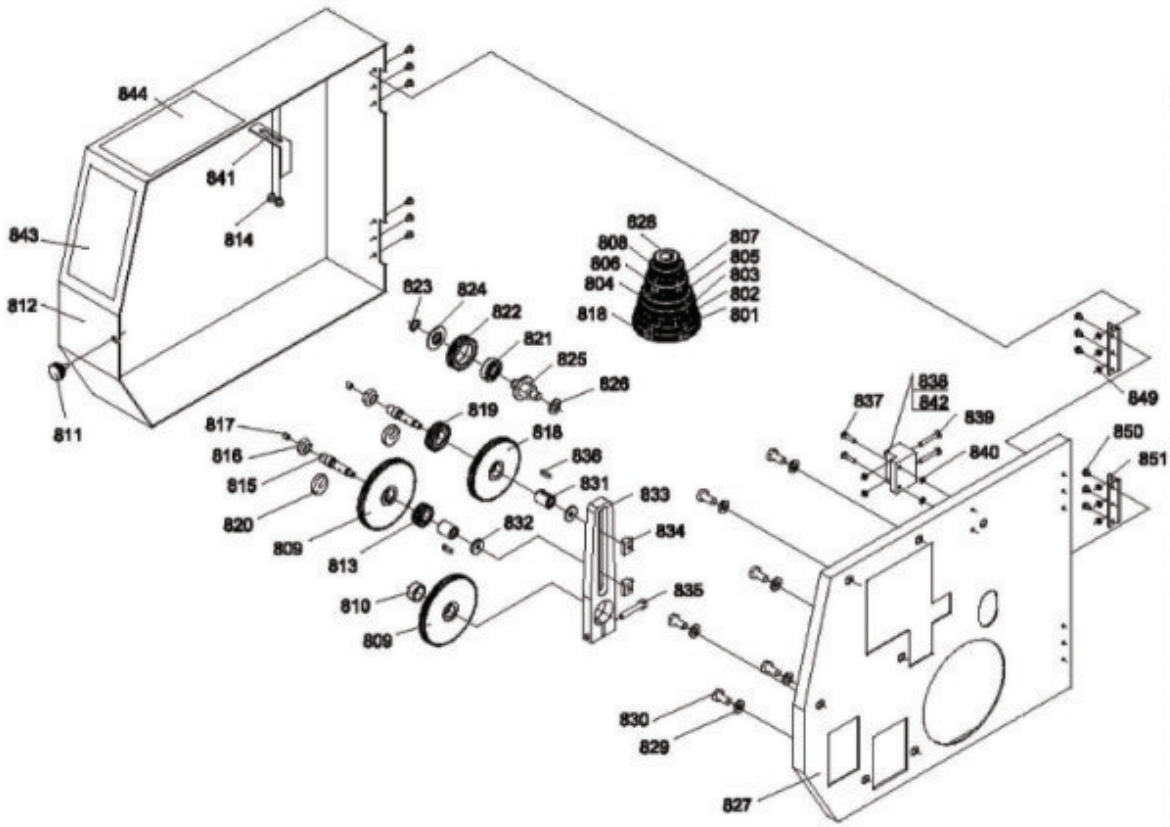

PART NO.	DESCRIPTION
820	open washer
821	bearing 6001
822	intermediate gear z'40
823	check ring 12
824	washer
825	fixed shaft bolt
826	washer
827	gear box support plate
828	gear z'40
829	washer 8
830	bolt m8*16
831	sliding bearing
832	washer
833	gear rest
834	square nut
835	screw m6*35
836	key 4*16
837	screw m4*16
838	micro switch
839	screw m4*30
840	nut m4
841	limited plate
842	micro switch s box
843	main label
844	changing gear label
849	hex nut m4.7
850	phlp hd scrm6-1.0*4
851	hinge

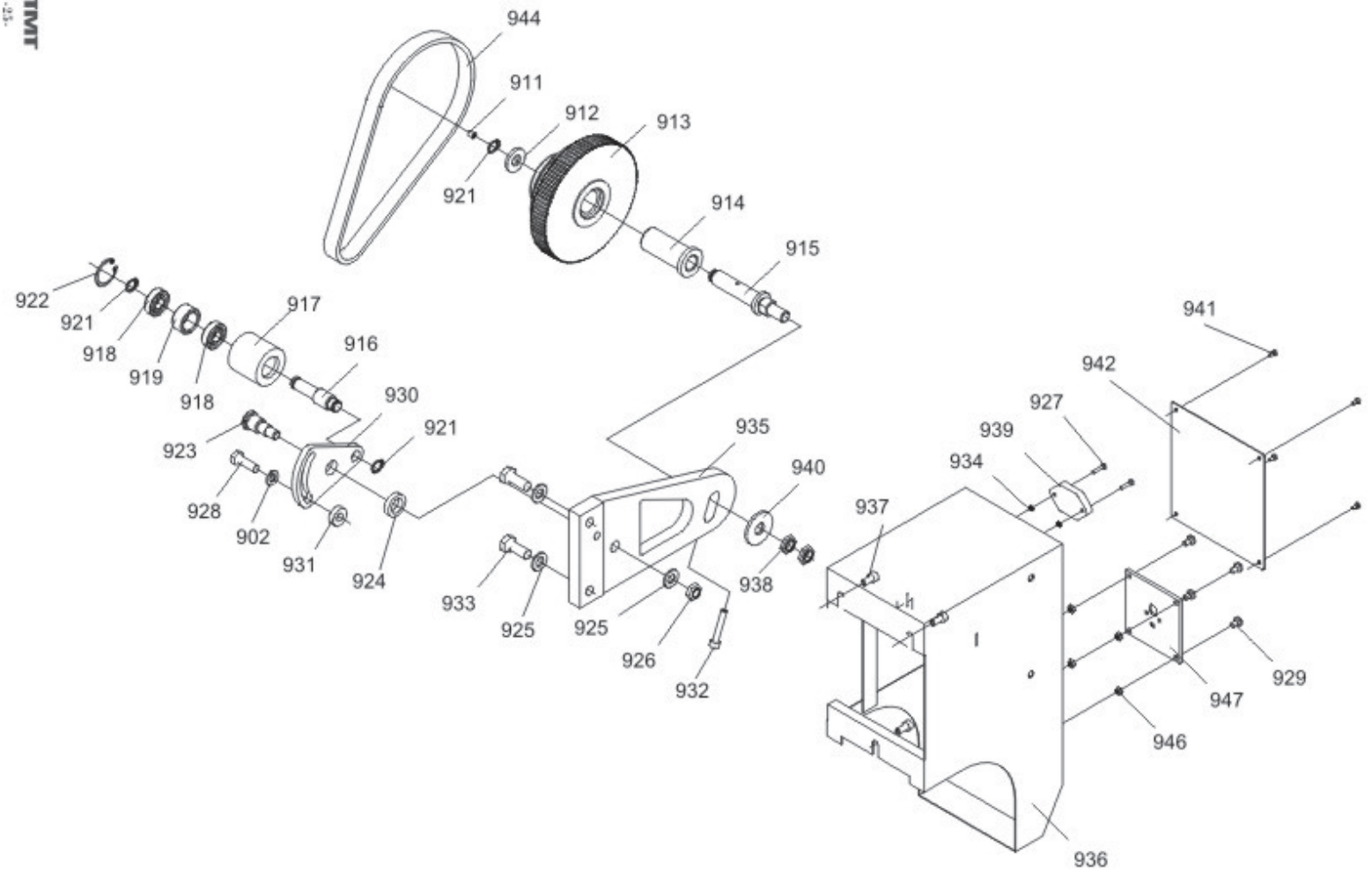

PART NO.	DESCRIPTION
925	FLAT WASHER 10MM.
926	HEX NUT M10-1.5
927	PHLP HD SCR M3-.5 X 14
928	HEX BOLT M8-1.25 X 25
929	PHLP HD SCR M5-.8 X 8
930	FAN-SUPPORT
931	ADJ SLOT SPACER
932	PHLP HD SCR M6-1.0 X 35
933	HEX BOLT M10-1.5 X 25
934	HEX NUT M5-0.8
935	PULLEY SUPPORT
936	MOTOR COVER
937	PHLP HD SCR M6-1 X 12
938	ARM SHAFT NUT
939	SOCKET OUTLET
940	SUPPORT SPACER
941	PHLP HD SCR M3-.5 X 6
942	ELECTRIC TOP COVER
943	LOCK WASHER 8MM
944	TIMING BELT 1.5 X 124 X 15
945	V-BELT M-30 3L300
946	HEX NUT M5-0.8
947	MAIN POWER SOCKET

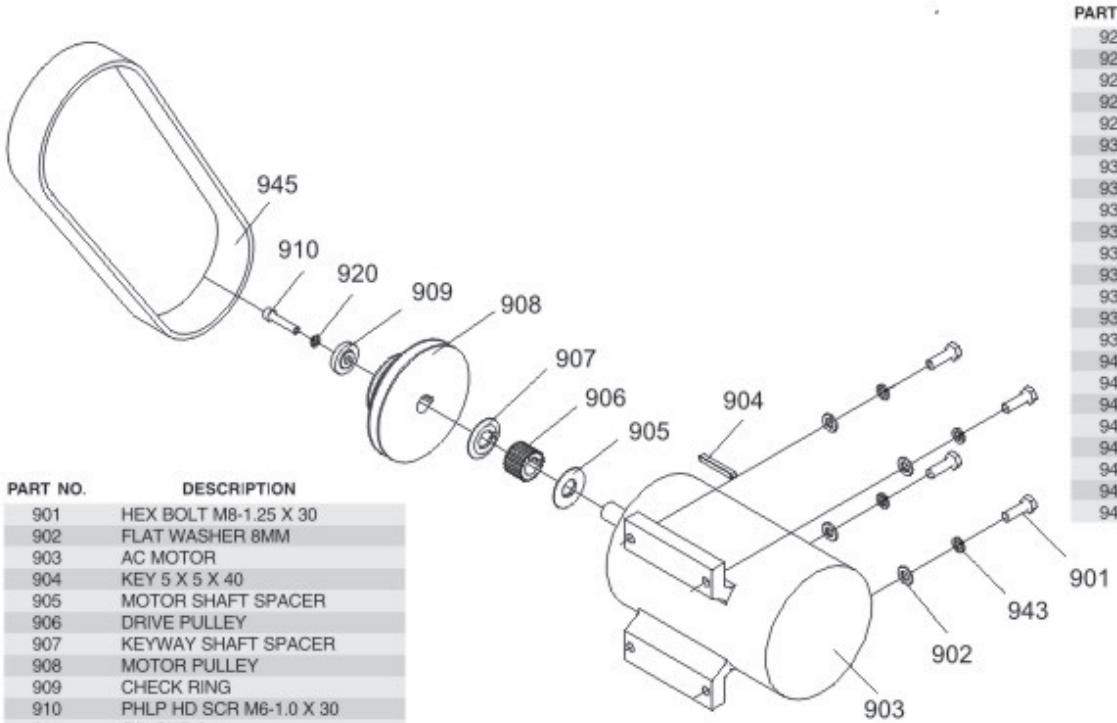

PART NO.	DESCRIPTION
901	HEX BOLT M8-1.25 X 30
902	FLAT WASHER 8MM
903	AC MOTOR
904	KEY 5 X 5 X 40
905	MOTOR SHAFT SPACER
906	DRIVE PULLEY
907	KEYWAY SHAFT SPACER
908	MOTOR PULLEY
909	CHECK RING
910	PHLP HD SCR M6-1.0 X 30
911	OIL CUP 6
912	GREAT WASHER
913	COUNTER PULLEY
914	SLIDE BEARING
915	ARM SHAFT
916	BEARING ARBOR
917	TENSION PULLEY
918	BEARING 6001
919	SPACER
920	LOCK WASHER 6MM
921	EXT RETAINING RING 12MM
922	EXT RETAINING RING 28MM
923	PIVOT
924	PIVOT SPACER